WIRE DIAGRAM, CT4-2000 FAMILY

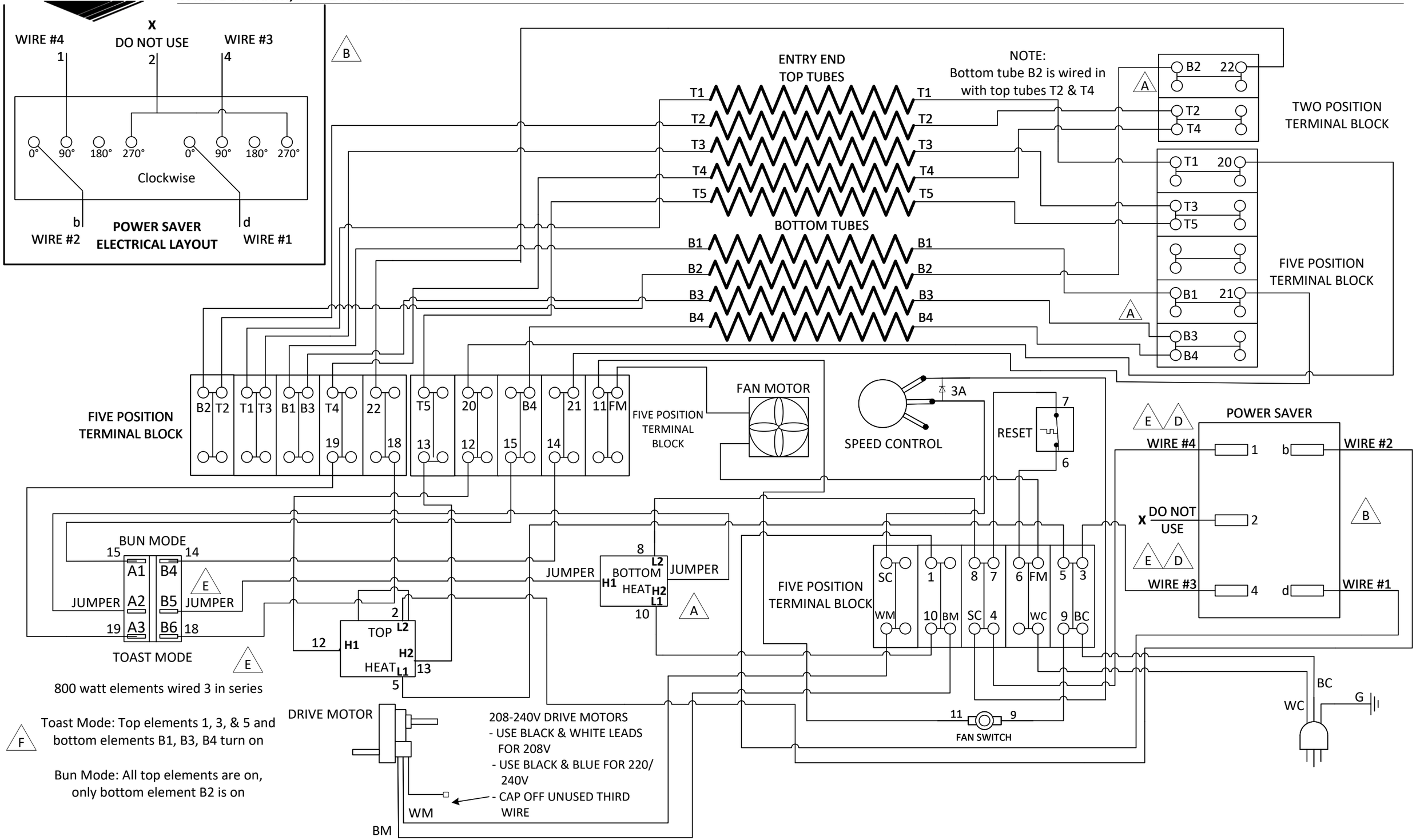

©2018 Document No. WD049 Rev F