VOLLRATH®

Project:

Item Number:

Quantity:

Hot, Cold, Frozen Modular Drop-Ins

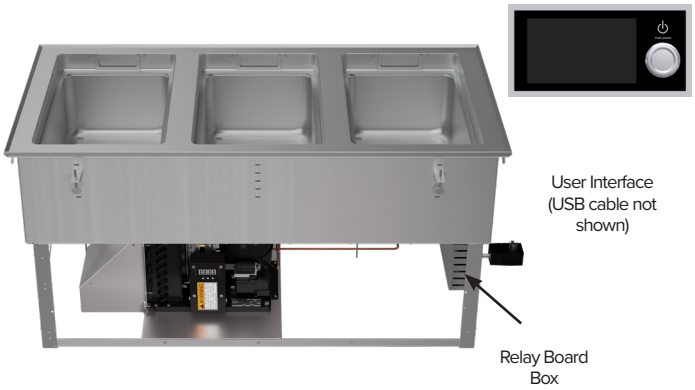

FC-HCF-03208-AD

AGENCY LISTINGS

SANITATION

WARRANTY

All models shown come with a Vollrath® standard warranty against defects in materials and workmanship. For full warranty details, please refer to VollrathFoodservice.com.

FEATURES & BENEFITS

- Wells operate independently in hot, cold, or frozen modes.
- Top flange, well, and user interface are exceptionally-durable 18-gauge, 300-series stainless steel.
- Units utilize R290 refrigerant, which has a lower GWP (Global Warming Potential) than many previously-used refrigerants.
- User Interface includes 7' (2.1 m) USB cable for flexible mounting options.
- Well is wrapped with refrigeration coils for maximum cooling.
- Standard mounting clips are included for easy installation on counters up to 3" (7.6 cm) thick.
- The inner-well assembly is insulated with foamed-in-place polyurethane for efficiency and performance.
- Units are designed for simplified serviceability.
- A 2" (7.6 cm) stepped cold-wall recess creates a cold-air blanket over the top of the food to maintain NSF compliance.
- Well accepts full-size and fractional food pans up to 6" (15.2 cm) deep; use adapter bars with fractional pans.
- ¾" (1.9 cm) integral drain is standard **(no master shut off)**.
- 10' (3 m) cord with plug is included.

Due to continued product improvement, please consult VollrathFoodservice.com for current product specifications.

ITEMS

Item/Model	Description
FC-HCF-01120-AD	1-Well Auto Drain, 120V
FC-HCF-01120-AD-FF	1-Well Auto Drain, Flat Flange, 120V
FC-HCF-01208-AD	1-Well Auto Drain, 120/208–240V
FC-HCF-01208-AD-FF	1-Well Auto Drain, Flat Flange 120/208–240V
FC-HCF-02120	2-Well, 120V
FC-HCF-02120-AD	2-Well Auto Drain, 120V
FC-HCF-02120-AD-FF	2-Well Auto Drain, Flat Flange 120V
FC-HCF-02120-FF	2-Well Flat Flange, 120V
FC-HCF-02208	2-Well, 120V/208–240V
FC-HCF-02208-AD	2-Well Auto Drain, 120/208–240V
FC-HCF-02208-AD-FF	2-Well Auto Drain, Flat Flange 120/208–240V
FC-HCF-02208-FF	2-Well Flat Flange 120/208–240V
FC-HCF-03120	3-Well, 120V
FC-HCF-03120-AD	3-Well Auto Drain, 120V
FC-HCF-03120-AD-FF	3-Well Auto Drain, Flat Flange 120V
FC-HCF-03120-FF	3-Well Flat Flange, 120V
FC-HCF-03208	3-Well, 120V/208–240V
FC-HCF-03208-AD	3-Well Auto Drain, 120/208–240V
FC-HCF-03208-AD-FF	3-Well Auto Drain, Flat Flange 120/208–240V
FC-HCF-03208-FF	3-Well Flat Flange 120/208–240V
FC-HCF-04208	4-Well, 120V/208–240V
FC-HCF-04208-AD	4-Well Auto Drain, 120/208–240V
FC-HCF-04208-AD-FF	4-Well Auto Drain, Flat Flange 120/208–240V
FC-HCF-04208-FF	4-Well Flat Flange 120/208–240V

CLEARANCE AND ENVIRONMENT

Wells	Bottom*		Side Intake		Front / Back Discharge	
	Clearance	Opening	Clearance	Opening	Clearance	Opening
1	NA	80 sq. in.	3"	80 sq. in.	3"	80 sq. in.
2 & 3	1.5 in.	80 sq. in.	NA	NA		80 sq. in.
4	1.5 in.	80 sq. in. per compressor (2)	NA	NA		160 sq. in.

*Bottom panel of condensing unit.

- Unit must be installed and serviced by a qualified professional, including User Interface (UI) and USB cable; USB cable connects UI to Relay Board.
- Follow all regulations, warnings, and cautionary guidance specific to products that utilize R290 refrigerant.
- Unit is made for indoor use only in ambient temperatures below 86 °F (30 °C). Warmer temperatures or modifying refrigeration settings will take unit out of NSF compliance and will void the warranty.
- Prevent drafts and room air currents from disturbing the curtain of cold air immediately above the food pans.
- Water is required during hot operation for even heating. When equipped with autodrain feature, water automatically drains during cold operation.

DIMENSIONS Shown in inches (cm)

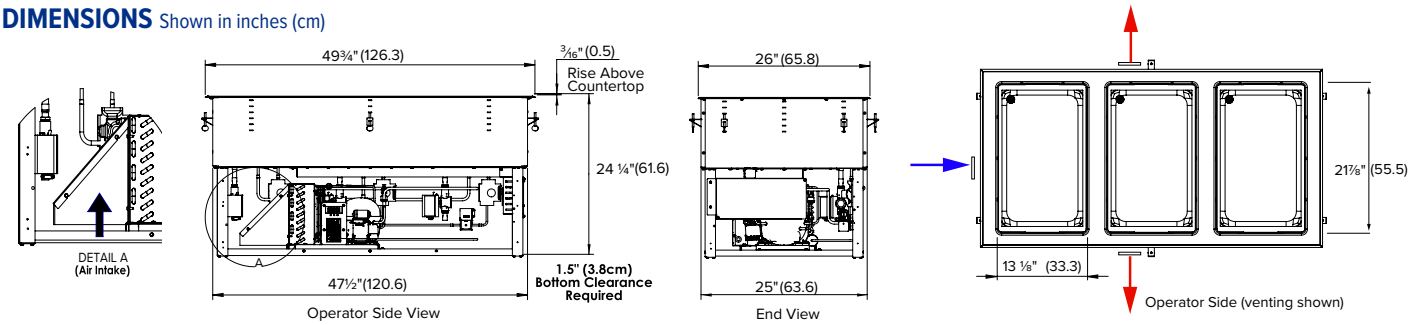

Standard User Interface

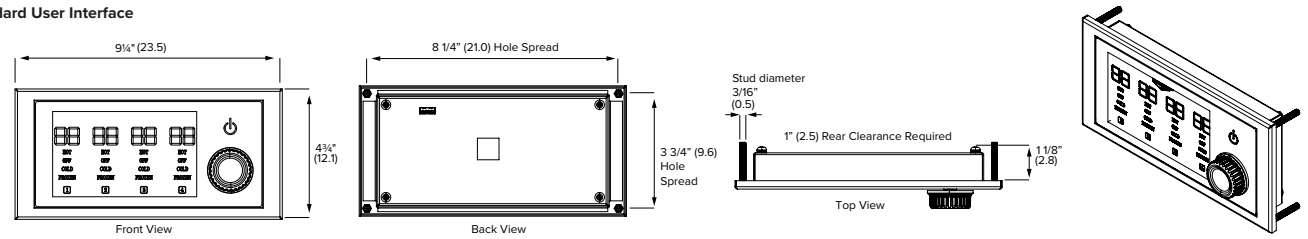

Recessed User Interface - Optional (Part# FC-HCF_RC)

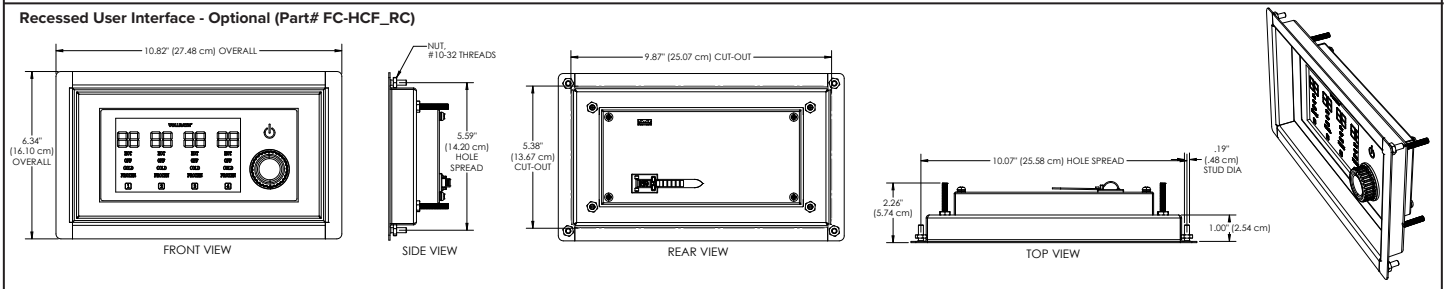

SPECIFICATIONS

Item	Overall Top Dimensions W x D x H	Cutout Dimensions			Weight LB (Kg)	Comp. (HP)	Peak Heat of Rej (BTUH)	R290 Refrig. Charge (g)	Heater per Well Watts	Max Amp Draw	V	Plug	Straight Blade Receptacles
		Drop-In*	User Interface	Louvers									
FC-HCF-01120**	18.0 x 26.0 x 24.4 (45.7 x 66.0 x 62.0)	17 5/16 x 25 ¼ (44 x 64.1)	7 7/8 x 3 7/8 (20.0 x 9.8) 3/8" (9.5mm) corner radius	8 x 10 (20.3 x 25.4)	107 (48.5)	¼	2800 Cold 2100 Hot	70	625	5.1	120	NEMA 5-15P	G W
FC-HCF-01208**										3.6	120/ 208-240	NEMA 14-20P	G Y X W
FC-HCF-02120**	33.9 x 26.0 x 24.4 (86.1 x 66.0 x 62.0)	33 1/16 x 25 ¼ (84 x 64.1)			185 (83.9)		2800 Cold 4300 Hot	100		10.3	120	NEMA 5-15P	G W
FC-HCF-02208**										6.6	120/ 208-240	NEMA 14-20P	G Y X W
FC-HCF-03120**	49.8 x 26.0 x 24.4 (126.5 x 66.0 x 62.0)	49 x 25 ¼ (124.5 x 64.1)			212 (96.2)		2800 Cold 6400 Hot	130		15.5	120	NEMA 5-20P	G W
FC-HCF-03208**										9.6	120/ 208-240	NEMA 14-20P	G Y X W
FC-HCF-04208**	65.7 x 26.0 x 24.4 (166.9 x 66.0 x 62.0)	64 7/8 x 25 ¼ (164.7 x 64.1)			324 (147)		5600 Cold 8500 Hot	100 x 2		13.2	120/ 208-240		

NOTICE:

- **7/8" (2.2cm) **Add "-AD" to end of the item number for "Auto Drain" and/or "-FF" to replace drip-free flange with flat flange. Please refer to page 1 of this SPC for full Item Numbers.**
- 1-Well Drop-Ins are not offered with manual drains; all include Auto-Drain (AD) technology. 4-Well Drop-Ins are not offered in 120V options.
- Vollrath® Drop-Ins are made to order and cannot be canceled or returned. The installer must ensure cut-outs on new installations are correct, or retrofit installation dimensions match with Vollrath product dimensions. Vollrath does not guarantee that our models retrofit with competitive models (as competitive specifications can change without notice). We recommend countertop cut-outs be made after receipt of the Vollrath drop-in to ensure proper fit.
- Do NOT modify the cord or plug. Modification will damage the drop-in or cause injury, and will void the warranty and UL listing..

VOLLRATH

VollrathFoodservice.com

The Vollrath Company, L.L.C.
1236 North 18th Street
Sheboygan, WI 53081-3201 U.S.A.
Main Tel: 800.624.2051 or 920.457.4851
Main Fax: 800.752.5620 or 920.459.6573
Customer Service: 800.628.0830
Canada Customer Service: 800.695.8560

Technical Services
techservicereps@vollrathco.com
Induction Products: 800.825.6036
Countertop Warming Products: 800.354.1970
All Other Products: 800.628.0832

© 2026 The Vollrath Company, L.L.C.